ITEMISER® 5X

Rapiscan®

DATASHEET



The Itemiser® 5X applies optimized detection libraries and advanced algorithms to rapidly detect a broad range of explosive and narcotic threats. It's non-radioactive Ion source technology eliminates the need for annual wipe tests and licensing. The portable desktop design features automated internal calibration to help decrease consumables usage, boost availability rates, and increase detection probability.

Itemiser 5X is ECAC G1 approved, meeting the highest European standards for aviation security. In addition, it is widely used for prisons, customs and borders, law enforcement, event security, as well as ports and critical infrastructure applications.

HIGH-SPEED TRACE DETECTION

NON-RADIOACTIVE ION SOURCE FOR SIMPLIFIED COMPLIANCE

OPTIMIZED DESORBER FOR EFFICIENT SAMPLE INTRODUCTION

RELIABLE, PORTABLE, AND COST-EFFICIENT

UK DfT APPROVED · CANADA TC APPROVED · EUROPE ECAC G1 APPROVED · US TSA ACSTL QUALIFIED · CHINA CAAC CERTIFIED · FRANCE STAC CERTIFIED

RESULTS IN EIGHT SECONDS OR LESS

The Itemiser 5X trace detection system can be configured for explosives, narcotics, or dual-mode detection in a single device, reducing mechanical failure risk compared with two systems. Results are delivered in approximately 8 seconds with minimal interpretation required. Advanced detection libraries and sophisticated algorithms enhance threat detection accuracy.

NON-RADIOACTIVE ION SOURCE TECHNOLOGY

Using Rapiscan's patented, aviation approved Ion Trap Mobility Spectrometer (ITMS™) technology, Itemiser 5X detects trace particles from explosives, narcotics, and chemicals on people and luggage—without a radioactive ion source—eliminating wipe tests, licensing requirements, and enabling license free transport.

EFFICIENT SAMPLE INTRODUCTION

The optimized desorber design provides efficient sample introduction, and improved detection, as trapped microscopic particles, or vapors, are evaporated by heat while in the desorber and drawn into the detector, resulting in faster analysis for the operator.

COST EFFECTIVE, RELIABLE OPERATIONS

Automated internal calibration eliminates calibration traps, while a patented regenerative dryer increases uptime and removes dryer material replacement costs. A lightweight, highly portable design with an internal one hour battery enables relocation without shutdown, eliminates warmup time, and provides backup during power loss. An intuitive interface lets operators focus on sampling as the onboard computer securely logs all data for easy file recall and printing. Solid state storage, advanced diagnostics, automated maintenance reminders, custom substance libraries, autosaved results, and REMOTE CONNECT™ software for secure fleet monitoring and control - from any networked computer - ensure high availability, reliability, and performance for mobile and permanent operations.

Dimensions are in mm[in]

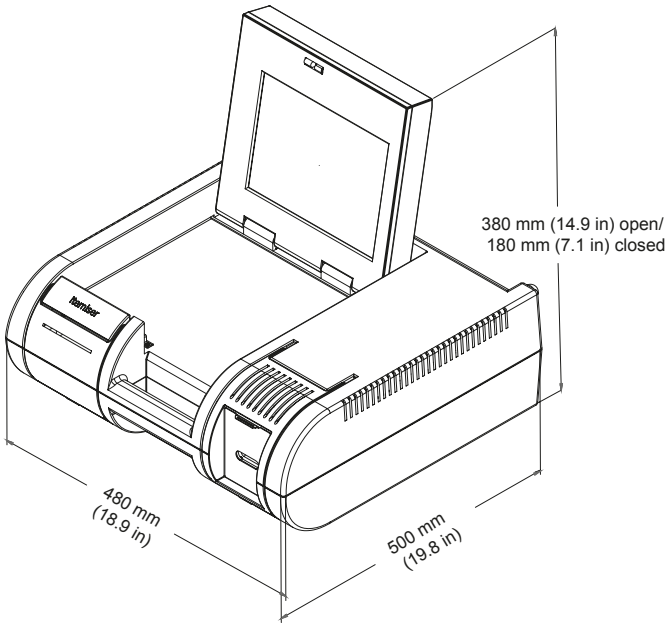

ENVIRONMENT & POWER

DETECTOR TYPE	Ion Trap Mobility Spectrometer (ITMS™)
ANALYSIS TIME	Default 8 seconds
SAMPLE ACQUISITION	Surface wipe (particulate)
OPERATING TEMP	0 to 40°C (32 to 104°F)
PROTECTION RATING	IP20
POWER	External AC to DC Power Supply Input 100-240 VAC, ~1.8 A, 47-63 Hz Output 15 VDC, 10 A, 150W
BATTERY BACKUP	Up to 60 minutes
SOLID STATE DRIVE	512 GB (minimum)
OPERATING SYSTEM	Linux
DISPLAY	10.4 in (26.4 cm) LCD monitor with resistive touch screen
SIGNAL PROCESSING	Recognition on multiple peaks and explosives - Output to 4 different display types, including bar graph or time-of-flight plasmagram
DETECTION CAPABILITIES	Simultaneous detection of explosives and narcotics. Aviation certified configurations will be explosive only
DATA TRANSFER	Two USB 2.0 ports; Ethernet port

PHYSICAL SPECIFICATIONS

DIMENSIONS	L	500 mm (19.8 in) open
		460 mm (18 in) closed
	W	480 mm (18.9 in)
	H	380 mm (14.9 in) open
		180 mm (7.1 in) closed
NET WEIGHT (Approx)		12.99 Kg (28.65 lbs)

KEY FEATURES AND OPTIONS

- Simultaneous dual-mode detection
- Non-radioactive ionization source
- Regenerative dryer
- Automated Internal Calibration
- Folding Monitor Screen with auto backlight shutoff
- Remote Status Monitoring
- Automated Maintenance Scheduling
- Built in printer
- Customizable Substance libraries

info@rapiscan.com www.rapiscan.com

Rapiscan®

© 2026 Rapiscan. All rights reserved worldwide. The product described herein may be protected by one or more patents or pending patent applications owned by or licensed to Rapiscan and/or its affiliates in various countries throughout the world. This document provides a summary of various product features. We make no representations or warranties, express or implied, regarding the accuracy or completeness of the information contained herein. This document is not intended to provide a comprehensive description of all specifications, benefits or limitations, or of any risks associated with product use. We expressly disclaim liability for any errors, inaccuracies, or omissions in this document and any direct or indirect consequences resulting from reliance on its contents. Actual product performance may vary based on numerous factors not described in this document. We provide no express warranties, and none should be implied, regarding the product's suitability for any specific purpose or its performance under all circumstances. Due to applicable export regulations, the product may not be available in all countries or to all purchasers.